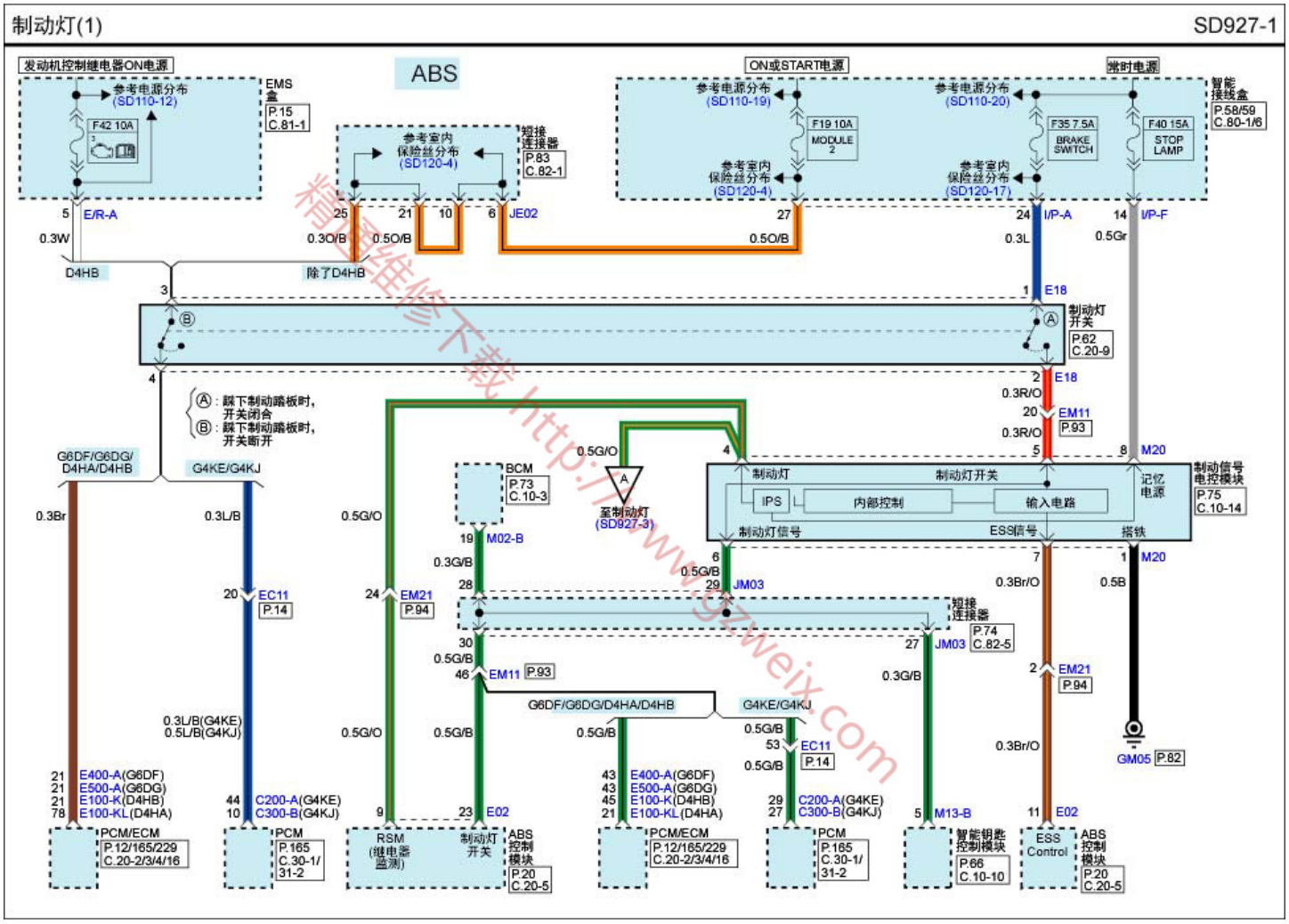

精图维修下载 http://www.qtweix.com